AC control with Triac and uProcessor (a bigger blinky!!)

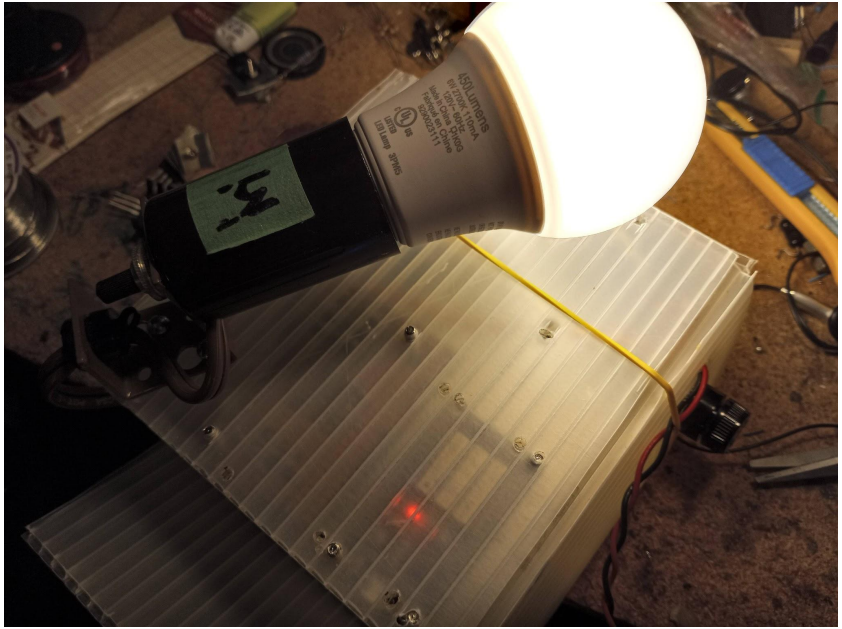

For rapid on/off cycling of AC power

Circuit diagram of triac control

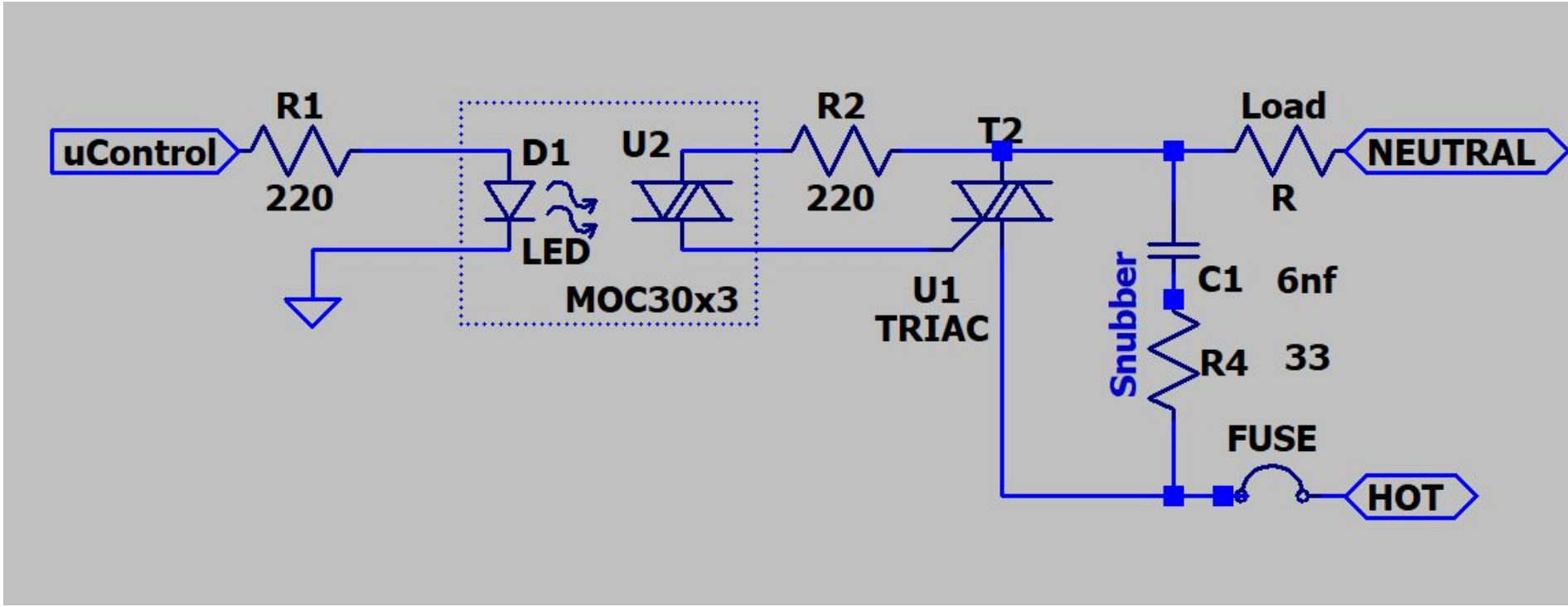

Zero crossing pulse detector

R3 is for user input, and has no effect on the pulse detector.

Time from the pulse interrupt controls the triac

[Bristolwatch article]

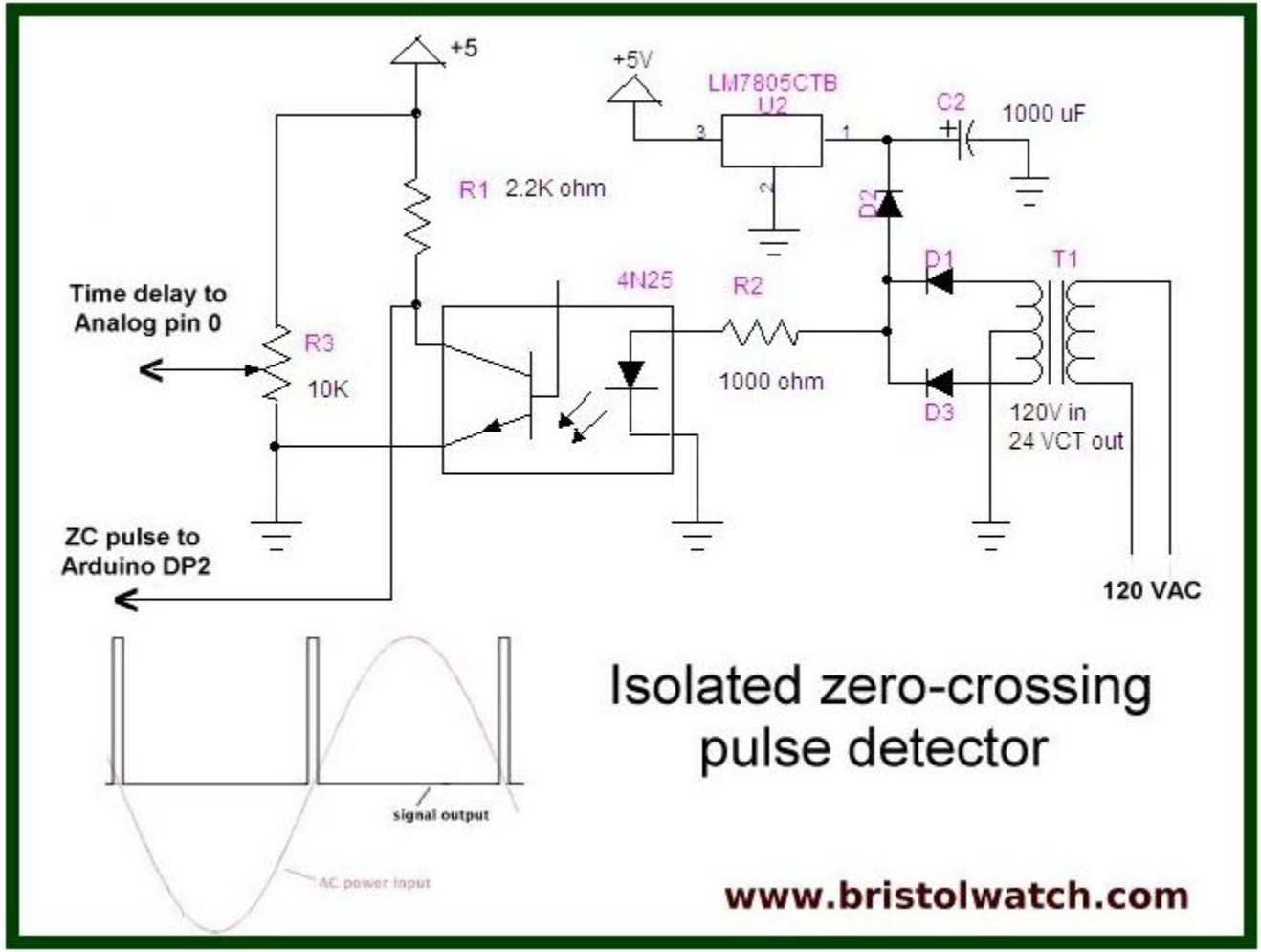

Zero crossing detector

120 Hz

3.3 v

Component layout on stripboard. Wirewrap between uController and Sense-triac board

6	8	9	10	11	12	
TRIAC controller						
Antenna						
uController bottom view						
				1		
				2	io36	
				3	io39	
				4	io34	
				5	io35	
				6	io32	
				7	io33	
r1	triacPulsePin 25			8	io25	
				9	io26	
	zeroCrossPin 27			10	io27	
				11	io14	
n 32				12	io12	
				13	io13	
				14	gnd	bla
				15	5v	
						red
	USB					

1	2	3	4	5	6	7	8	9	10	11	12	13	14	15
2						airgap			Wxxx are wire jumpers					
3			STRIPBOARD											
4		==========						T1			c1			Fused hot
5		==========									r5	c1		
6		==========						T2	r2			r5		Load1
7		==========									snubber			
8		==========						T3	Wgate					
9		==========						Triac						
10				r1	led+ 1		line	r2						
11				Wgnd	led-		nc				External Connections			
12					nc		gater	Wgate			Primary Winding		Fuse1	hotAC
13			ac	r3	MOC30xx opto		triac gater				Primary Winding		Load2	neutral
14				r3	anode		collector	r4	zeroCrossPin 27					
15				Wgnd	cathode		emmiter	Wgnd						
16					EL817 Opto Isolator									
17								3	in	ps+		c4		
18							w5	2	out	3.3v			c3	
19	Wgnd			Wgnd	Wgnd			1	Wgnd	ps-	g3	c4	c3	
20								LD33cv Voltage Regulator						
21														
22	w3.3		r4	sw1	x	sw1	w5	switches between USB power and this board power						

Inside the Box

Electrical safety tape to be applied.

A bridge rectifier could be used instead of messy wiring off thetransformer

Beware 110v AC can kill.

Code to Test Triac.

Uses gpio-2 LED

```
//Purpose: to test triac operation
#define triacPulsePin 25 //out to MOC302x led
#define acOnLedPin 2 // out to on-indicator Led

void setup()  {
  pinMode(triacPulsePin, OUTPUT);
  digitalWrite(triacPulsePin, LOW);
  pinMode(acOnLedPin, OUTPUT);
  digitalWrite(acOnLedPin, LOW);
}
void loop() {
  digitalWrite(acOnLedPin, HIGH);
  digitalWrite(triacPulsePin, HIGH);
  delay(1000); //one second
  digitalWrite(acOnLedPin, LOW);
  digitalWrite(triacPulsePin, LOW);
  delay(4000); // 4 seconds
} // end loop
```

Code that senses zero crossing

For info on interrupts, refer to Andreas Spies video https://youtu.be/CJhWlfkf-5M

Untested Arduino code

60 Hz AC is 16.7ms per cycle